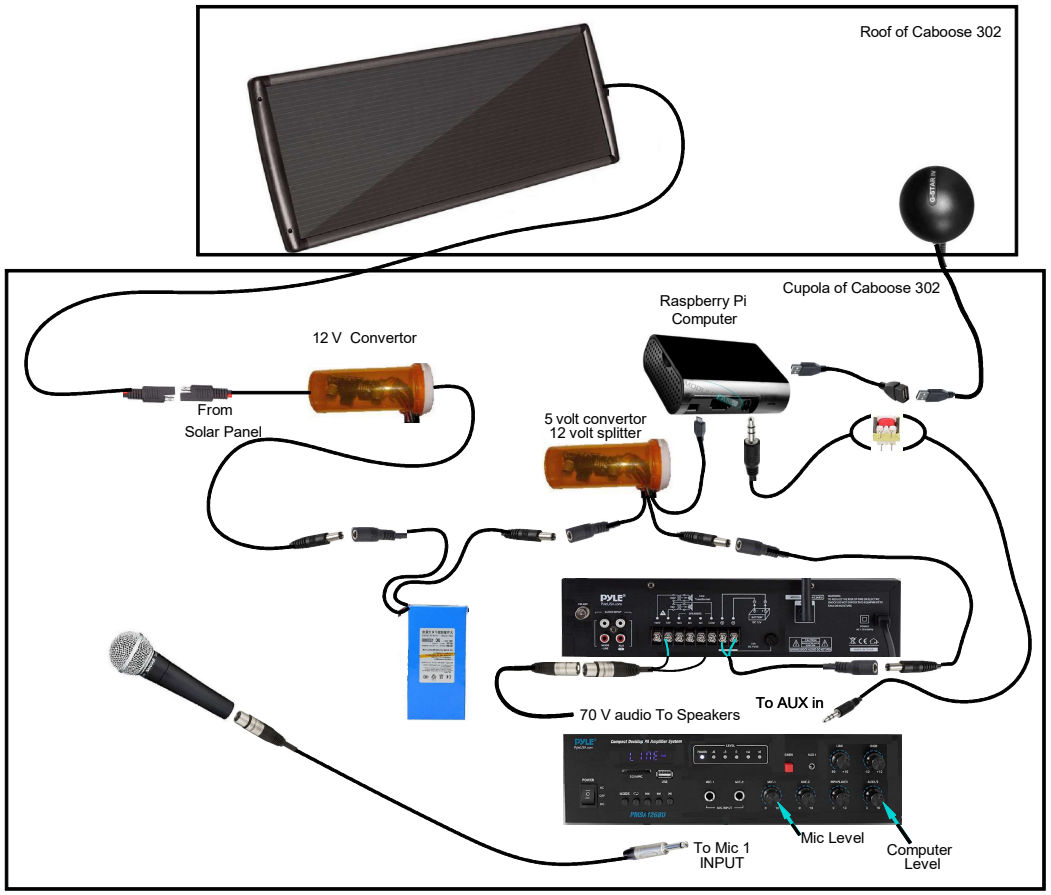
Roof of Caboose 302
Cupola of Caboose 302
Raspberry Pi
Computer
12 V Convertor
From
Solar Panel
5 volt convertor
12 volt splitter
70 V audio To Speakers
To AUX in
To Mic 1
INPUT
Mic Level
Computer
Level

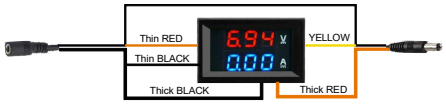
Thin RED
Thin BLACK
Thick BLACK
YELLOW
Thick RED
6.94 V
0.00 A

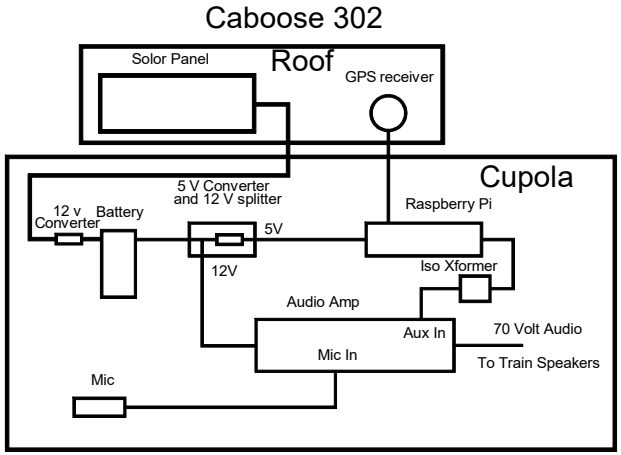
Caboose 302
Solor Panel
Roof
GPS receiver
Cupola
5 V Converter
and 12 V splitter
12 v
Converter
Battery
5V
12V
Raspberry Pi
Iso Xformer
Audio Amp
Aux In
Mic In
70 Volt Audio
To Train Speakers
Mic